零件目录

PARTSCATALOGUE

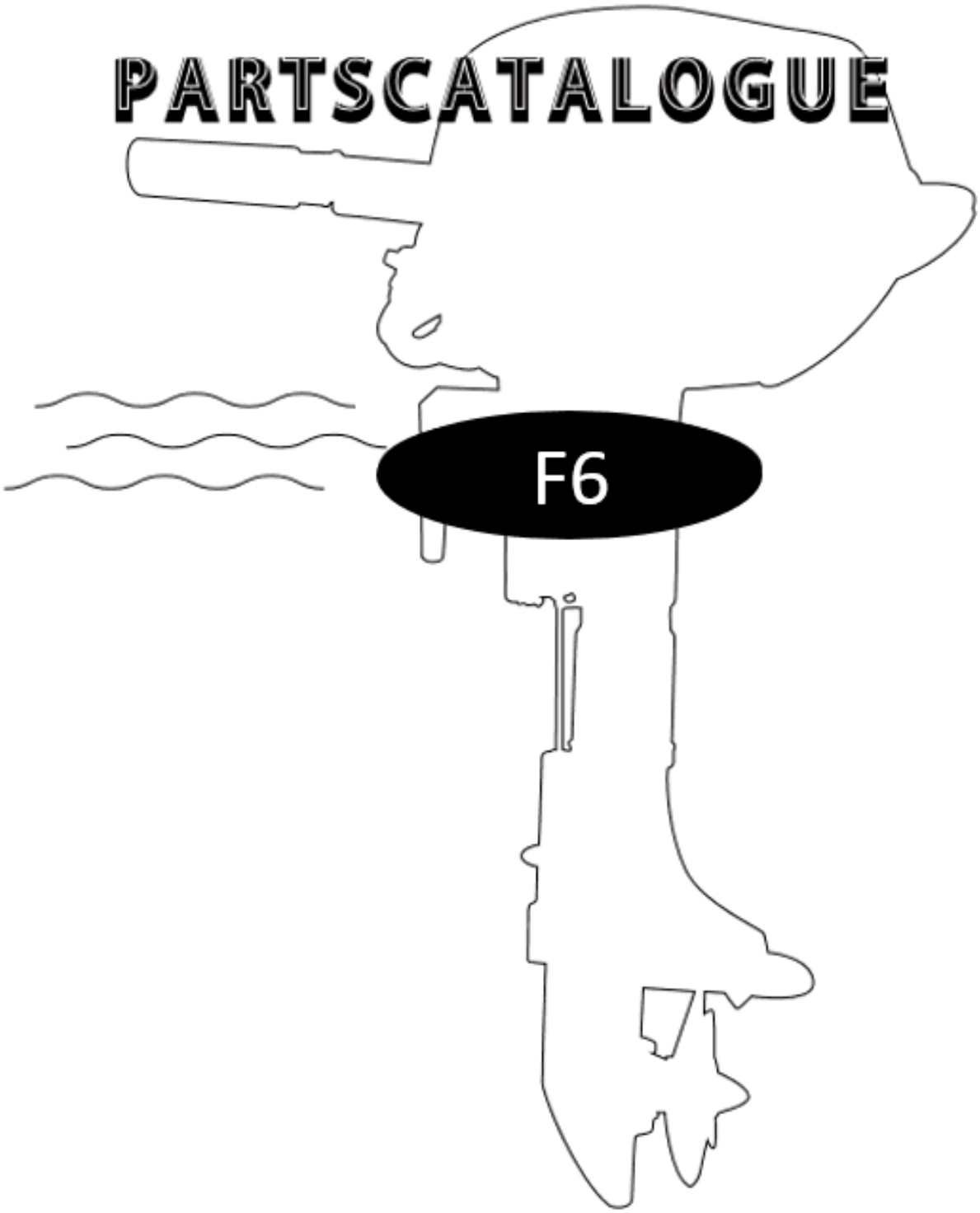

F6

目录 CONTENTS

1、顶罩 ----------1~2
TOP COWLING ----------1~2

2、起动罩 ----------3~4
STARTER ----------3~4

3、飞轮组件 ----------5~6
Flywheel ----------5~6

4、气缸和曲轴箱 ----------7~8
CYLINDER&CRANKCASE ----------7~8

5、曲柄 活塞 ----------9
CRANKSHAFT&PISTON ----------9

6、缸头 ----------10
Cylinder head ----------10

7、进气系统 ----------11
INTAKE ----------11

8、燃油系统 ----------12~13
FUEL ----------12~13

9、底罩 ----------14~15
COWLING,LOWER ----------14~15

10、操控系统 ----------16~17
Remote CONTROL ----------15~16

11、托架和水上装置 ----------18~19
BRACKET&UPPER CASING ----------17~18

12、水下装置和驱动系统 ----------20~21
LOWER CASING&DRIVE ----------20~21

13、内置油箱 ----------22
Built-in FUEL TANK ----------22

14、外接油箱 ----------23
External FUEL TANK ----------23

PARTS MANUAL F4B/F5B/F6	页码 PAGE NO.:	PAGE 01 OF 23
	零件名称:	顶罩
	PARTS NAME:	TOP COWLING

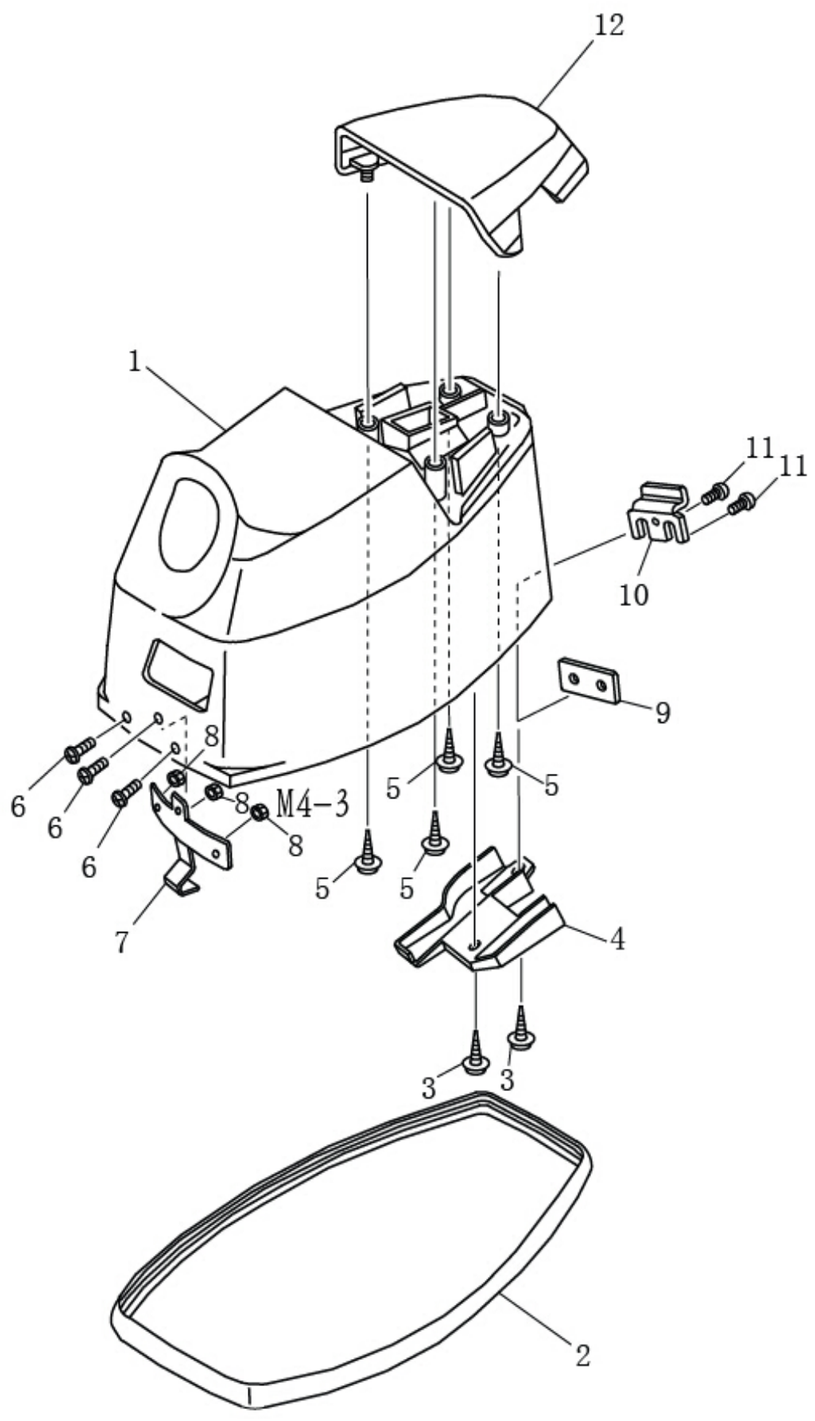

PARTS MANUAL F4B/F5B/F6	页码 PAGE NO.:	PAGE 02 OF 23
	零件名称:	顶罩
	PARTS NAME:	TOP COWLING

REF. NO. 编号	PART NO. 零件号码	DESCRIPTION 零件名称	DESCRIPTION 零件名称	NEEDED PCS 数量					REMARKS 备注
1	F6-01000001	顶罩	TOP COWLING ASSY	1					
2	F6-01000005	橡胶密封条L=1255	SEAL L=1255	1					
3	GB/T818-2000	十字盘头螺钉M5×12	SCREW M5×12	2					
4	F6-01000006	顶罩消音盖	MUFFLER COVER	1					
5	GB/T818-2000	十字盘头螺钉M4×12	SCREW M4×12	4					
6	GB/T818-85	十字盘头螺栓M4×10	SCREW M4×10	3					
7	F6-01000002	后勾板	HOOK PLATE	1					
8	GB/T6170-86	六角螺母M4	NUT M4	3					
9	F6-01000004	锁紧勾螺母板	NUT PLATE	1					
10	F6-01000003	前锁紧勾	HOOK LOCKING	1					
11	GB/T818-85	十字盘头螺栓M5×12	SCREW M5×12	2					
12	F6-01000007	顶罩外盖	COVER	1					
13	F6-01000008	顶罩标贴	STICKER,TOP COWLING	1					

PARTS MANUAL F4B/F5B/F6	页码 PAGE NO.:	PAGE 03 OF 23
	零件名称:	起动罩
	PARTS NAME:	STARTER

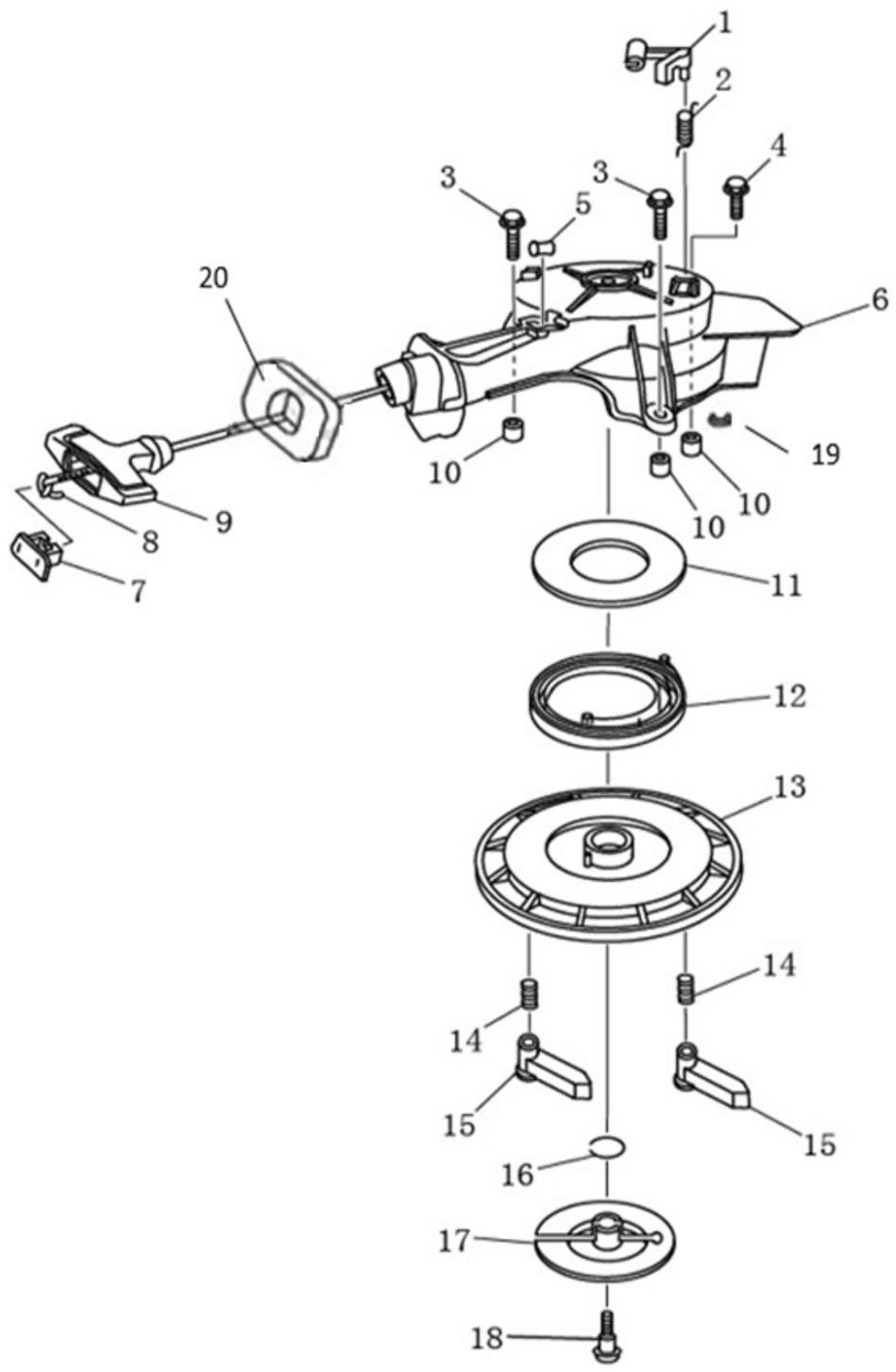

PARTS MANUAL F4B/F5B/F6	页码 PAGE NO.:	PAGE 04 OF 23
	零件名称:	起动罩
	PARTS NAME:	STARTER

REF. NO. 编号	PART NO. 零件号码	DESCRIPTION 零件名称	DESCRIPTION 零件名称	NEEDED PCS 数量					REMARKS 备注
1	F4-05070010	制动器	BRAKE,	1					START ASSY
2	F4-05070011	制动器扭簧	SPRING,BRAKE	1					
3	GB/T5789-2000	六角法兰螺栓M6×35	BOLT M6*35	2					
4	GB/T5789-2000	六角法兰螺栓M6×20	BOLT M6*20	1					
5	F15-11050103	启动绳导管	PIPE,ROPE	1					
6	F6-02020001	起动罩	STARTER CASE	1					
7	F15-11050403	起动手柄盖	CAP,STARTER HANDLE	1					
8	F4-05070009	起动绳φ4	ROPE	1					
9	F15-11050402	起动手柄	HANDLE,STARTER	1					
10	F6-02020004	衬管8.5×6.3×8	TUBE	3					
11	F4-05070013	起动轮减磨片	WASHER	1					
12	F4-05070005	涡型弹簧	SPRING,STARTER	1					
13	FF-11050403	起动轮	DRIVE WHEEL,STARTER	1					
14	F4-05070004	起动爪扭簧	TWISTING SPRING	2					
15	F4-05070003	起动爪	DRIVE PAWL	2					
16	F4-05070007	压板夹簧	SPRING CLIP,DRIVE PLATE	1					
17	F4-05070006	起动轮压板	DRIVE PLATE	1					
18	F4-05070008	起动压板螺钉	SCREW	1					
19	GB896-86	开口挡圈6	PIN,COTTER	1					
20	F4-05070014	起动减震块	RUBBER RING	1					

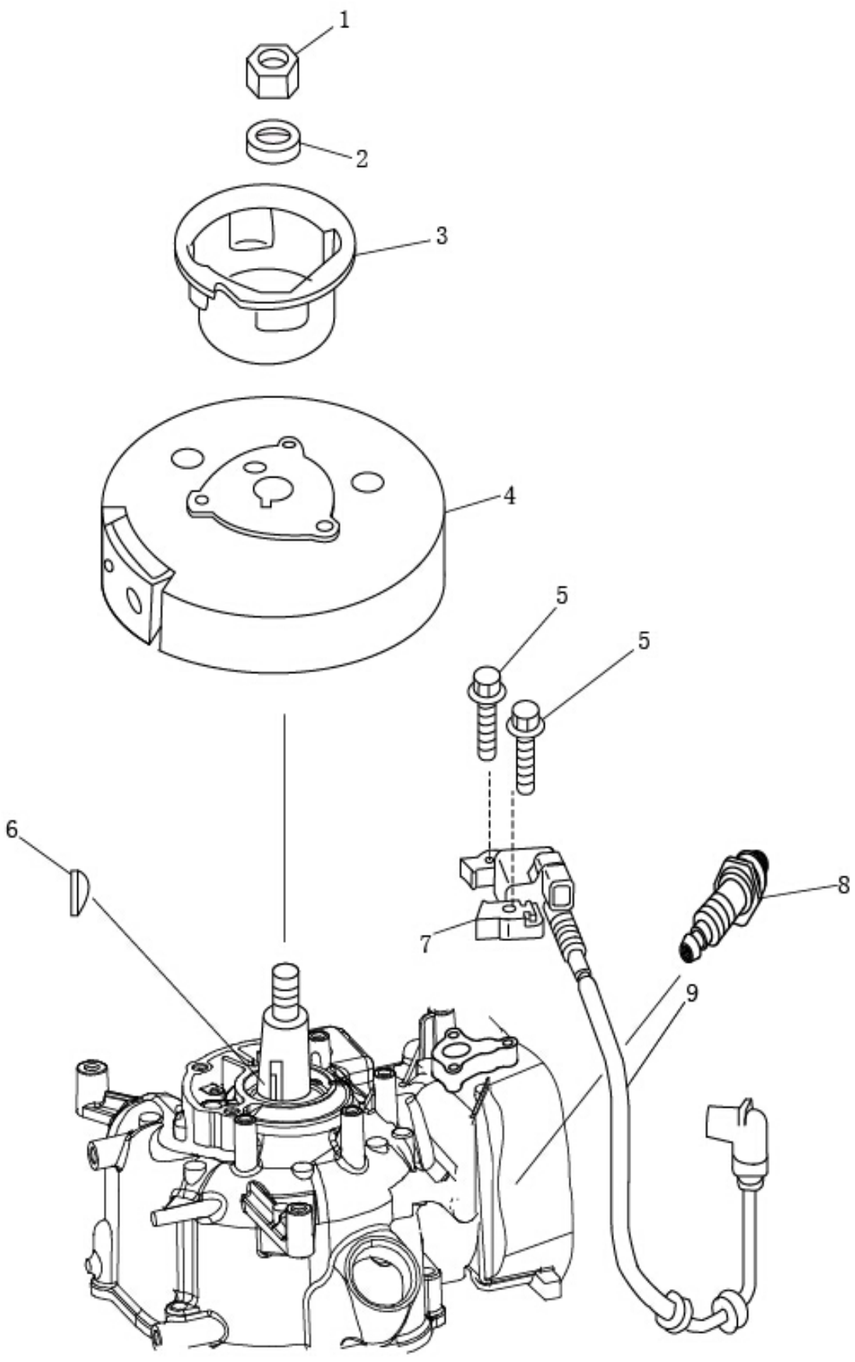

REF. NO. 编号	PART NO. 零件号码	DESCRIPTION 零件名称	DESCRIPTION 零件名称	NEEDED PCS 数量					REMARKS 备注
1	F15-11000007	飞轮螺母M12×1.25	NUT M12*1.25	1					
2	F15-11000006	飞轮螺母垫片26×12.5×2.	WASHER	1					
3	F6-02000043	起动鼓（内孔12.3）	DRUM,STARTER	1					
4	F6-08000001	飞轮	FLYWHEEL	1					
5	GB/T5789-2000	六角法兰螺栓M6×25	BOLT M6*25	2					
6	GB/T1099.1-2003	半圆键	WOODRUFF KEY	1					
7	F6-08000100	磁电线圈组件	CDI WITH IGNITION COIL	1					
8	NGK CR6HSA	火花塞CR6HSA	SPARK PLUG	1					
9	F6-08000101	四芯线束插（白、黑）	HARNESS	1					

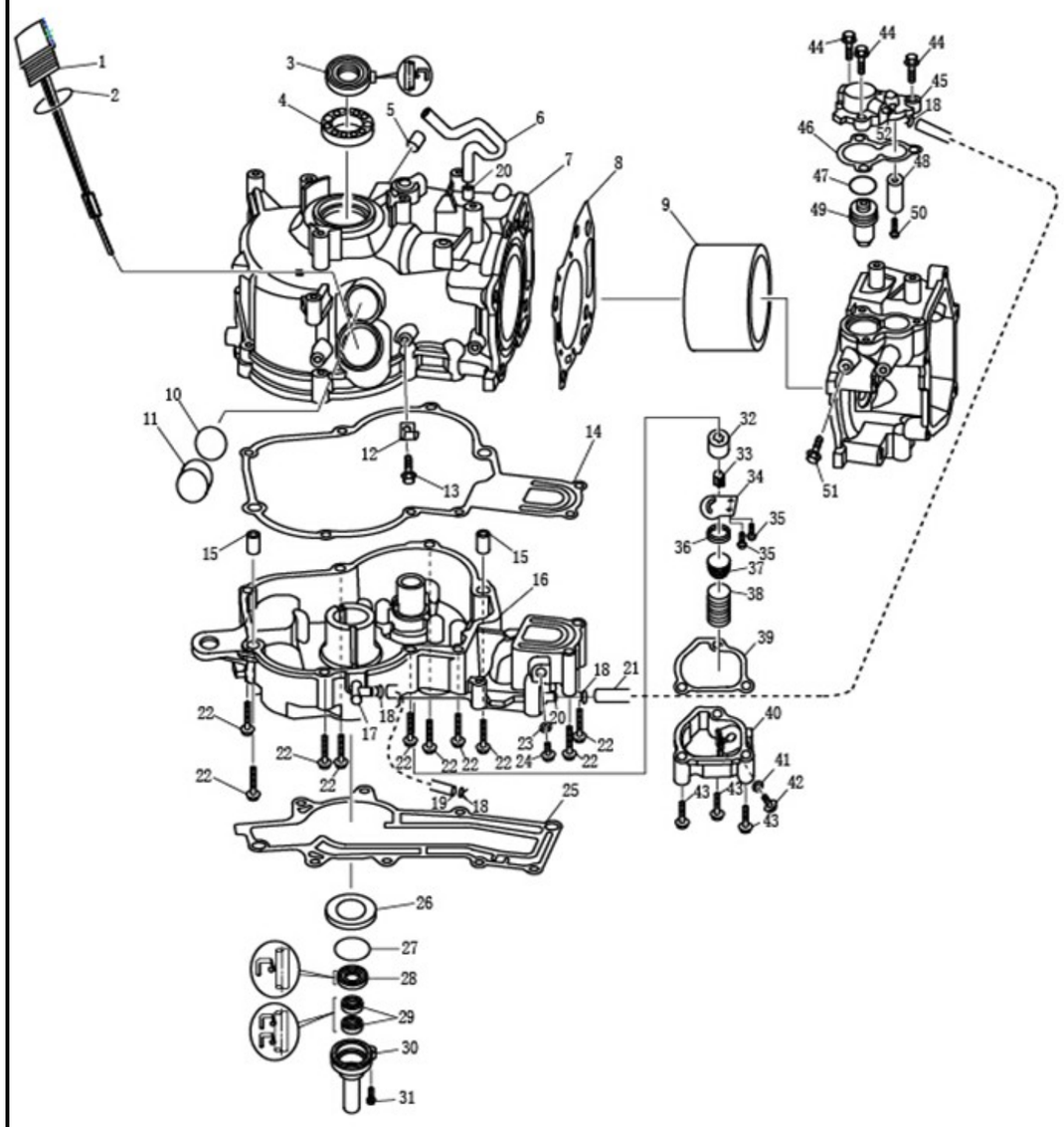

REF. NO. 编号	PART NO. 零件号码	DESCRIPTION 零件名称	DESCRIPTION 零件名称	NEEDED PCS 数量					REMARKS 备注
1	F4-05000006	带尺机油盖	OIL CAP,GAUGE	1					
2	F4-05000007	O形圈（φ24×3.1）	O-RING	1					
3	F6-02000003	曲轴上油封25×40×5	OIL SEAL	1					
4	GB/T276-95	轴承6205C3	BEARING	1					
5	F6-02000102	闷头8×6	BULKHEAD	1					
6	F6-02000034	进气盒定形管5×10	HOSE	1					
7	F6-02000100	箱体	BODY CRANKCASE	1					

REF. NO. 编号	PART NO. 零件号码	DESCRIPTION 零件名称	DESCRIPTION 零件名称	NEEDED PCS 数量					REMARKS 备注
8	F6-02000019	缸垫	GASKET,CYLINDER HEAD	1					
9	F6-02000101	缸套68×61×84.5	CYLINDER SLEEVE	1					
10	F6-02000104	油窗玻璃橡胶圈（O形圈代	O-RING	1					
11	F6-02000103	油窗玻璃（铝闷头代）	OIL WINDOW GLASS	1					
12	F6-02000027	长夹线片	LONG CLIP	1					借F2.5
13	GB/T5789-2000	六角法兰螺栓M6×10	BOLT M6*10	1					
14	F6-02000002	箱体垫	GASKET,CRANKCASE	1					
15	F15-11000001	空心定位销10×6.3×14	PIN	2					
16	F6-02000001	箱盖	CAP CRANKCASE	1					
17	F15-08000100	直角水嘴6	WATER NOZZLE	1					
18	F15-09000015	管卡9.5	CLIP SPRING 9.5	4					
19	F6-02010205	油管5×10×490	HOSE	1					
20	F6-02000044	水嘴8	WATER NOZZLE	1					
21	F6-02010206	油管5×10×260	HOSE	1					
22	GB/T5789-2000	六角法兰螺栓M6×50	BOLT M6*50	10					
23	GB/T96-85	平垫圈8×12.5×1.5铜	WASHER	1					
24	GB/T5789-2000	六角法兰螺栓M8×20	BOLT M8*20	1					
25	F6-06000005	发动机衬垫	GASKET,ENGINE	1					
26	F6-02000004	挡油板	OIL BAFFLE	1					
27	F4-05000404	O形密封圈34×2	HOUSIWG,OIL SEAL	1					
28	F4-05000402	曲轴油封20×30×7	OIL SEAL	1					
29	F4-05000403	油封10.8×21×7	OIL SEAL	2					
30	F4-05000401	油封壳体	OIL SEAL	1					
31	GB/T5789-2000	六角法兰螺栓M8×20	BOLT M8*20	1					
32	F6-02000006	油泵外转子	OUTER ROTOR , OIL PUMP	1					
33	F6-02000005	油泵内转子	INNER ROTOR , OIL PUMP	1					
34	F6-02000007	转子盖板	COVER	1					
35	GB/T818-85	十字盘头螺栓M6×12	BOLT PAN HEAD	2					
36	F6-02000200	滤网组合	SIEVE ASSY	1					
37	F6-02000201	滤网嵌件	INSERT SIEVE	1					
38	F6-02000010	滤网弹簧1.8×26×34-6	SPRING	1					
39	F6-02000009	放油盖衬垫	GASKET	1					
40	F6-02000008	放油口盖	COVER	1					
41	F4-05000102	放油螺栓垫片14.5×8.5×1	GASKET,ENGINE OIL DRAIN	1					
42	GB/T5789-2000	六角法兰螺栓M8×15	BOLT M8*15	1					
43	GB/T5789-2000	六角法兰螺栓M6×30	BOLT M6*30	3					
44	GB/T5789-2000	六角法兰螺栓M6×20	BOLT M6*20	3					
45	F6-02000024	节温器盖	COVER,THERMOSTAT	1					
46	F6-02000023	节温器盖垫	GASKET,COVER	1					
47	F4-05000007	节温器减震圈	DAMPER,THERMOSTAT	1					
48	F4-05030001	节温器阳极13×5.5×15	ANODE,THERMOSTAT	1					
49	F15-11010022	节温器	THERMOSTAT	1					
50	GB/T818-85	十字盘头螺栓M5×25	BOLT M5*25	1					
51	GB/T5789-2000	六角法兰螺栓M6×12	BOLT M6*12	1					
52	F15-11010030	水嘴8	WATER NOZZLE	1					

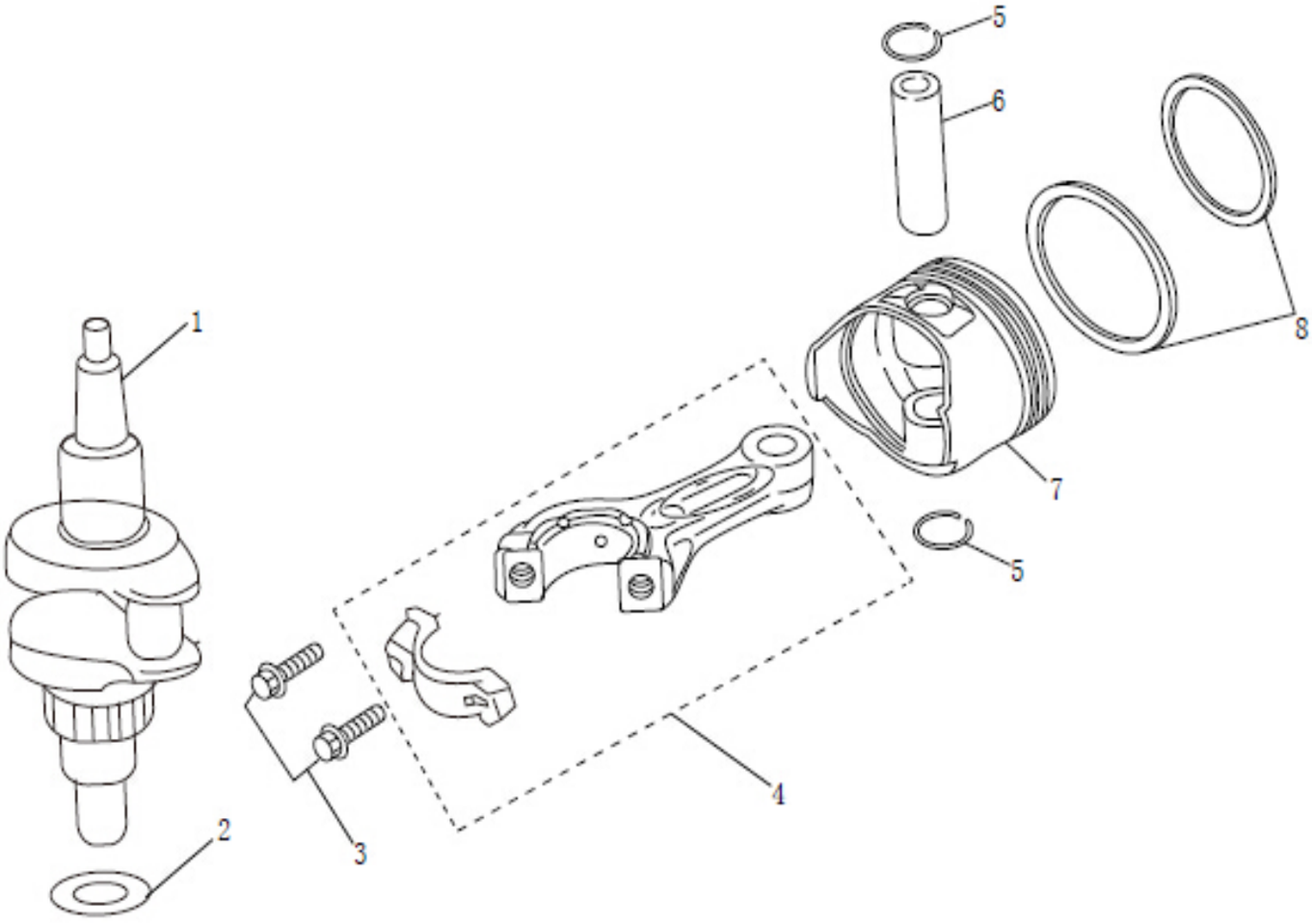

REF. NO. 编号	PART NO. 零件号码	DESCRIPTION 零件名称	DESCRIPTION 零件名称	NEEDED PCS 数量					REMARKS 备注
1	F6-02000012	曲轴	CRANKSHAFT	1					
2	F6-02000013	减磨圈34.5×26.5×0.5	WASHER,CRANKSHAFT	1					
3	F6-02000019	连杆螺栓M7×35	BOLT M7*35	2					
4	F6-02000014	连杆28×15×82	CONNECTING ROD	1					
5	F6-02000018	活塞销卡簧	CIRCLIP	2					
6	F6-02000017	活塞销15×11×43	PIN,PISTON	1					
7	F6-02000015	活塞62×39-21	PISTON	1					

8	F6-02000016	活塞环62×1.2-1.2-2	RING,PISTON	1					

PARTS MANUAL F4B/F5B/F6	页码 PAGE NO.:	PAGE 10 OF 23
	零件名称:	配气机构
	PARTS NAME:	ADMISSION GEAR

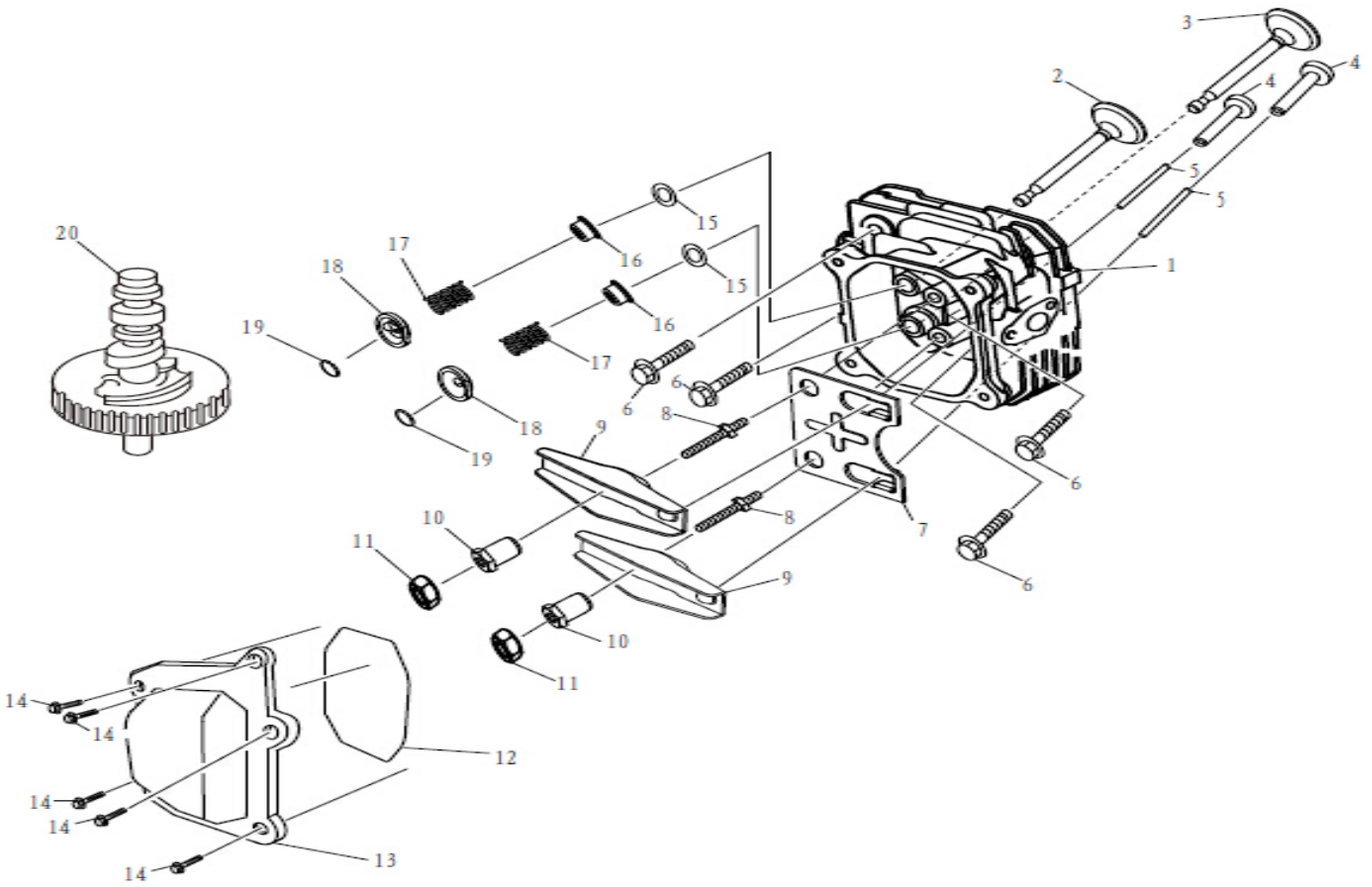

REF. NO. 编号	PART NO. 零件号码	DESCRIPTION 零件名称	DESCRIPTION 零件名称	NEEDED PCS 数量					REMARKS 备注
1	F6-02000300	缸头	HEAD CYLINDER	1					
2	F6-02000304	进气门¢26×5.5×65.8	VALVE,INTAKE	1					
3	F6-02000305	排气门¢22×5.5×66.4	VALVE,OUTLET	1					
4	F4-05000107	气门挺柱	PLUG,AIR	2					
5	F6-02000301	气门推杆L=122.7	ROD,VALVE	2					
6	GB/T5789-2000	六角法兰螺栓M8×60	BOLT M8*60	4					
7	F6-02000303	导向板	GUIDE PLATE	1					
8	F4-05040010	摇臂螺杆（总长36）	ROD,SWING	2					
9	F4-05040009	摇臂	ROCKER ARM	2					
10	F4-05040008	摇臂球座	BASE,ROD	2					
11	F4-05040007	锁紧螺母M6×0.75	LOCKING NUT M6*0.75	2					
12	F6-02000021	缸头罩密封垫	GASKET,CYLINDER HEAD COVER	1					
13	F6-02000020	缸头罩	CYLINDER HEAD COVER	1					
14	GB/T5789-2000	六角法兰螺栓M6×20	BOLT M6*20	5					
15	F6-02000306	气门弹簧垫片21×11×0.5	GASKET,VALVE	2					
16	F4-05040103	气门油封	SEAL	2					
17	F6-02000302	气门弹簧2.3×20.5×28-5	SPRING,VALVE	2					
18	F4-05040006	气门弹簧座	SPRING BASE	2					
19	F4-05040011	气门锁夹	LOCK,VALVE	2					
20	F6-02000400	凸轮轴	PRESSURE ASSY	1					

PARTS MANUAL F4B/F5B/F6	页码 PAGE NO.:	PAGE 11 OF 23
	零件名称:	进气系统
	PARTS NAME:	INTAKE

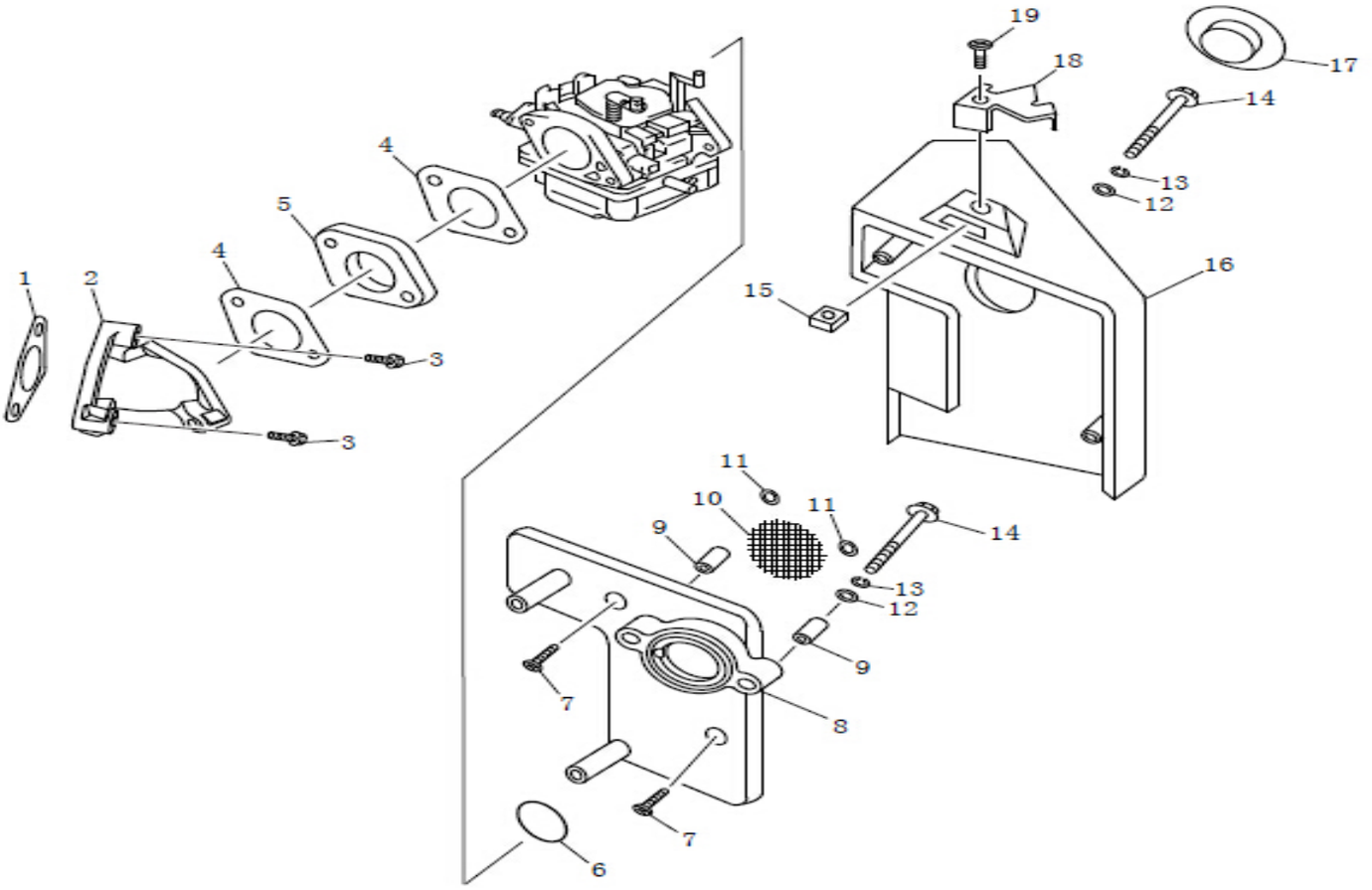

REF. NO. 编号	PART NO. 零件号码	DESCRIPTION 零件名称	DESCRIPTION 零件名称	NEEDED PCS 数量					REMARKS 备注
1	F6-02000040	进气管垫	GASKET, INTAKE	1					
2	F6-02000039	进气管	HOSE INTAKE	1					
3	GB/T5789-2000	六角法兰螺栓M6×25	BOLT M6×25	2					
4	F6-02000037	化油器密封垫	GASKET, CABBURETOR	2					
5	F6-02000038	化油器垫块	HOLDER, CARBURETOR	1					
6	F6-02000405	O形圈31.5×1.8(32×2)	O-RING	1					
7	GB/T818-85	十字盘头螺栓M4×12	BOLT M4×12	2					
8	F6-02000401	进气消音器座	SEAT SILENCER	1					
9	F6-02000403	进气消音器衬管8.5×6.3×10	PIPE, SILENCER	2					
10	F6-02000404	进气消音器网片	MESH SILENCER	1					
11	F6-02000405	消音器网卡圈	CLIP SILENCER	2					
12	GB/T96-85	平垫6	WASHER 6	2					
13	GB/T93-87	弹垫6	WASHER SPRING 6	2					
14	GB/T5789-2000	六角法兰螺栓M6×90	BOLT M6×90	2					
15	GB39-88	方形螺母M5	NUT M5	1					
16	F6-02000402	进气消音器盖	COVER SILENCER	1					
17	F4-05000707	消音器堵塞	STOPPER, SILENCER	1					
18	F6-02000036	风门钢索压板	PRESSING PLATE	1					

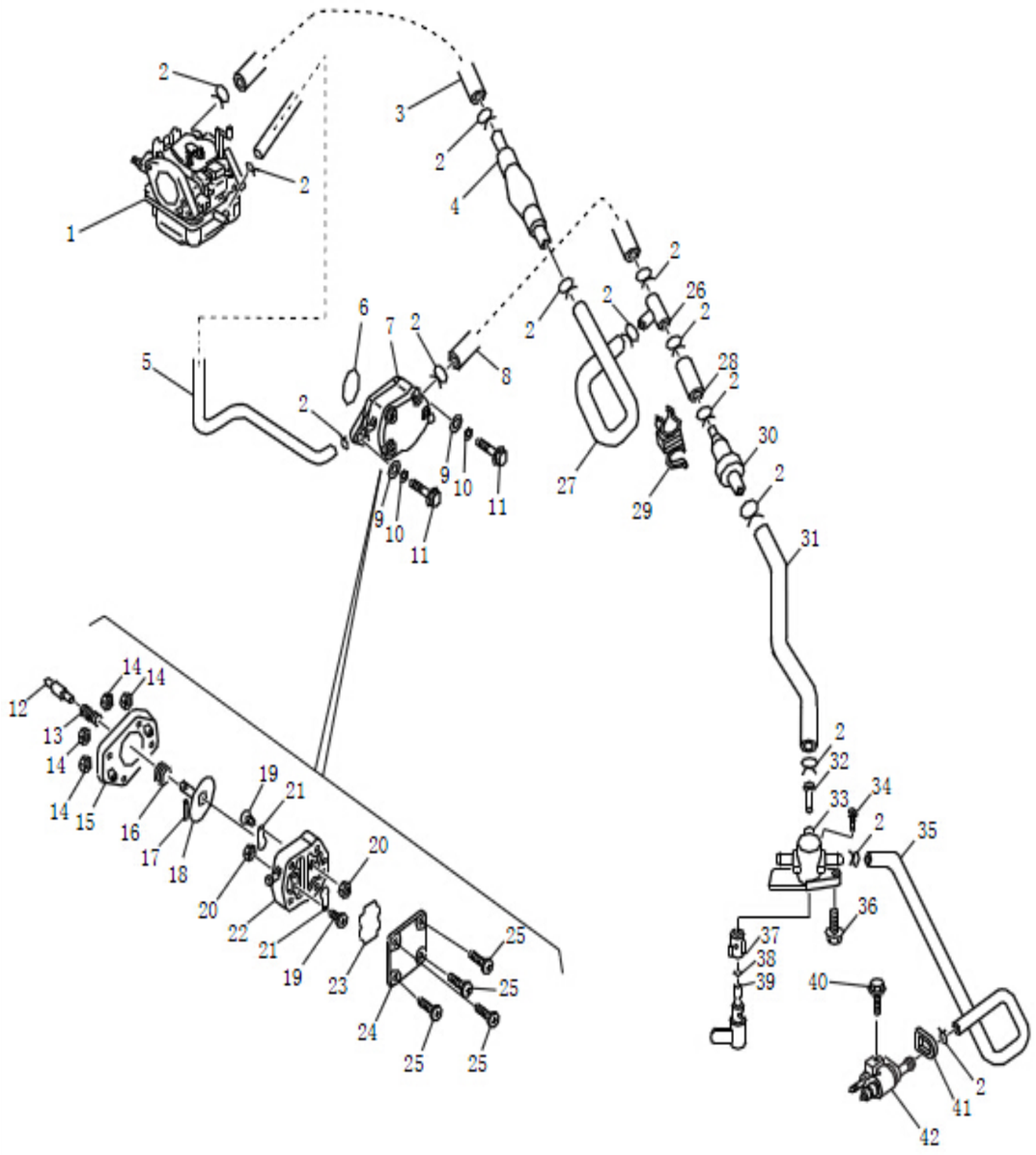

REF. NO. 编号	PART NO. 零件号码	DESCRIPTION 零件名称	DESCRIPTION 零件名称	NEEDED PCS 数量					REMARKS 备注
1	F6-02000041	化油器	CARBURETOR	1					
2	F15-09000015	管卡 9.5	CLIP SPRINGN	14					
3	F6-02010201	油管 5x10x190	HOSE	1					
4	F6-02010100	手动泵组件	MANUAL PUMP ASSY	1					
5	F6-02010202	油管 5x10x58	HOSE	1					
6	F6-05050010	O形圈 27x1.9	O-RING,PUMP BASE	1					
7	F6-05050000	燃油泵组件	FUEL PUMP ASSY	1					
8	F6-02010203	油管 5x10x68	HOSE	1					
9	GB/T96-85	平垫6	WASHER 6	2					
10	GB/T93-87	弹垫6	WASHER,SPRING 6	2					
11	GB/T5789-2000	六角法兰螺栓M6×30	BOLT M6*30	2					
12	F4-05050003	柱塞	PLUG	1					FUEL PUMP ASSY
13	F4-05050004	柱塞弹簧	SRPING,PLUG	1					
14	GB/T6170-86	六角螺母M4	NUT	4					
15	F4-05050001	燃油泵座	PUMP BASE	1					
16	F4-05050005	隔膜弹簧	PIN,STOPPER	1					
17	GB/T273-96	滚针3×12	BEARING	1					
18	F4-05050100	隔膜组件	STOPPER ASSY	1					
19	GB/T818-85	十字盘头螺栓M3×6	BOLT M3*6	2					
20	GB/T6170-86	六角螺母M3	NUT M3	2					
21	F15-11060004	单向阀片	SCRAP,VALVE	2					
22	F4-05050002	燃油泵壳	BODY,PUMP	1					
23	F15-11060006	上隔膜	UPPER STOPPER	1					
24	F4-11060003	燃油泵盖	CAP,FUEL PUMP	1					
25	GB/T818-85	十字盘头螺栓M5×25	BOLT M5*25	4					
26	F4-09000010	三通	TEE JOINT	1					
27	F6-02010004	手动泵定形管5×10	HOSE	1					
28	F6-02010204	油管5×10×28	HOSE	1					
29	F6-02000502	回转管卡	ROTATION CLIP	1					
30	T4-06000200	燃油过滤器	FILTER,FUEL	1					
31	F6-02010003	滤油器定形管5×10	HOSE	1					
32	F15-08000100	水嘴6	WATER NOZZLE	1					FUEL COCK ASSY
33	F6-03000100	油开关	FUEL COCK	1					
34	F6-03000103	手柄固定螺栓（M3*6改制	BOLT	1					
35	F6-02010002	燃油插头定形管5×10	HOSE	1					
36	GB/T5789-2000	六角法兰螺栓M6×12	BOLT M6*12	1					
37	F6-03000102	分流橡胶座	SHUNT RUBBER	1					
38		O形圈4.5×1.5	O-RING	1					
39	F6-03000101	油开关手柄	HANDLE,OIL SWITCH	1					
40	GB/T5789-2000	六角法兰螺栓M6×25	BOLT M6*25	1					
41	F6-03000010	燃油插头橡胶垫	FUEL RUBBER PAD	1					
42	F15-09010000	燃油管接头组件	JOINT,FUEL PIPE ASSY	1					

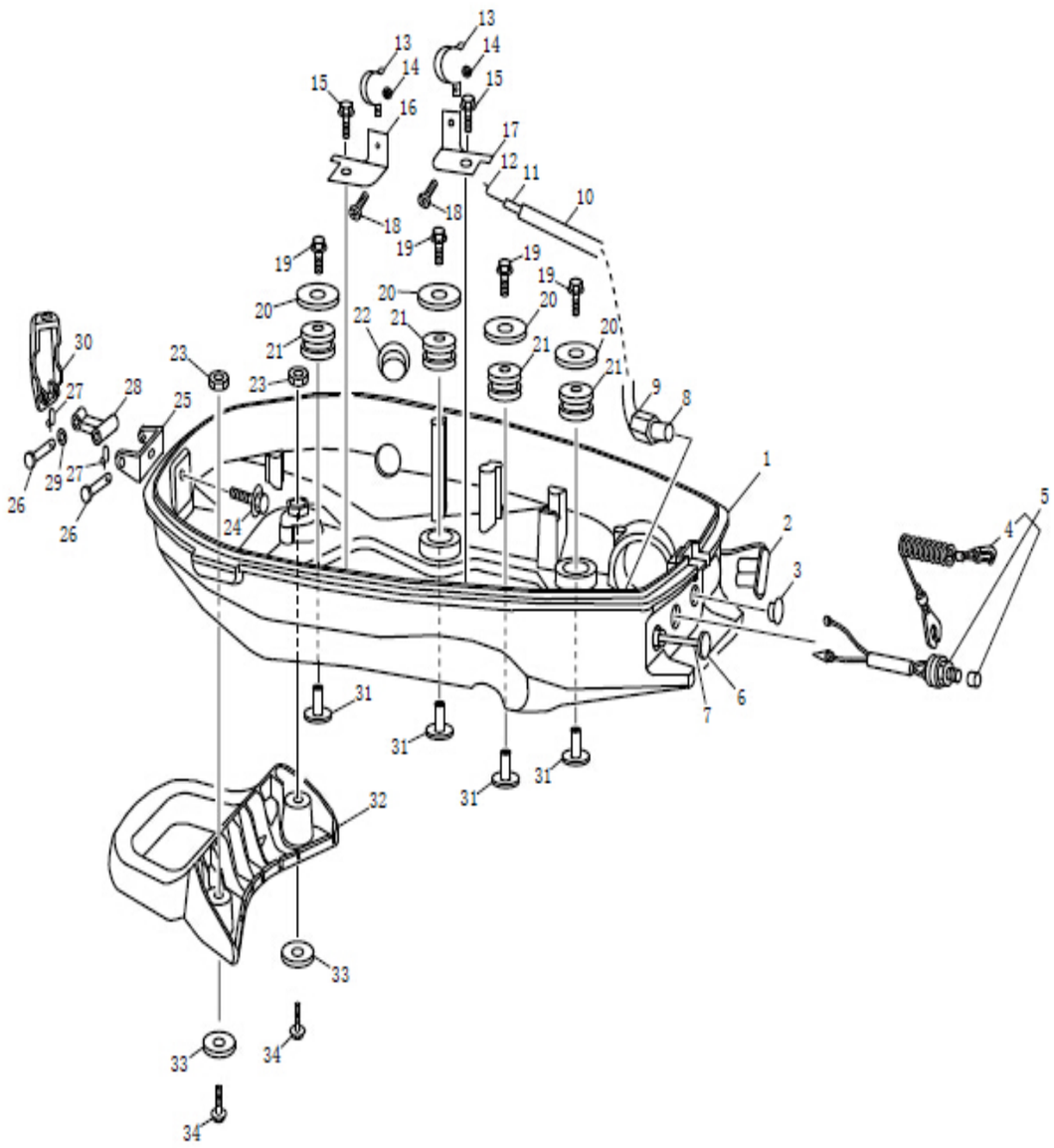

REF. NO. 编号	PART NO. 零件号码	DESCRIPTION 零件名称	DESCRIPTION 零件名称	NEEDED PCS 数量					REMARKS 备注
1	F6-03000001	底罩	BOTTOM COWLING	1					
2	F6-03000002	燃油插头护套	FUEL PLUG SHEATH	1					
3	F4-06000009	圆形闷头	GROMMET	1					
4	F15-16000003	急停安全索	LANYARD,STOP SWITCH	1					
5	F6-08000006	熄火开关（白700、黑900）	ENGINE STOP SWITCH ASSY	1					
6	F6-03010100	风门拉手组件	CHOKE HANDLE ASSY	1					CHOKE ASSY
7	F6-03010102	风门拉手滑杆	LEVER HANDLE HOLDER	1					
8	F6-03010200	风门拉手座 S	SEAT HEADLE HOLDER S	1					
9	F6-03010204	风门拉手螺母	NUT HEADLE HOLDER	1					
10	F6-03010203	风门锁套管7.5×5.5×270	BUSH	1					
11	F6-03010201	钢索外管5×1.5×320	BUSH	1					
12	F6-03010101	风门钢丝	CHOKE LEVEL	1					
13	F6-02010007	卡箍	CLIP	2					
14	GB/T6170-86	六角螺母M3	NUT M3	2					
15	GB/T5789-2000	六角法兰螺栓M6×10	BOLT M6*10	2					
16	F6-02010005	卡箍座（左）	SEAT CLIP L	1					
17	F6-02010006	卡箍座（右）	SEAT CLIP R	1					
18	GB/T818-85	十字盘头螺栓M3×6	BOLT M3*6	2					
19	GB/T5789-2000	六角法兰螺栓M6×35	BOLT M6*35	4					
20	GB/T96-85	平垫6	WASHER 6	4					
21	F6-03000002	减震圈	BUMPER	4					
22	F4-06000009	圆形闷头	GROMMET	1					
23	GB/T6170-86	六角螺母M8	NUT M8	2					
24	GB/T5789-2000	六角法兰螺栓M6×12	BOLT M6*12	1					
25	T2.6-030000103	锁紧支架组件	LOCKING BRACKET	1					
26	T2.6-030000104	支承肖M5×30	PIN,SUPPORT	2					LOCK KIT
27	T2.6-030000105	防脱落卡簧	PIN,COTTER	2					
28	T2.6-030000102	锁紧连杆	LOCKING ROD	1					
29	GB/T96-85	平垫6	WASHER 6	1					
30	F6-03000009	顶罩锁紧手柄	LOCK KIT,TOP COWLING	1					
31	F6-03000003	衬管25×8.5×6.3×19-2	BUSH	4					
32	F6-03020300	前把手	FRONT HANDLE	1					
33	F6-03020301	前把手衬管11×8.5×8.5	BUSH FRONT KNOB	2					
34	GB/T5789-2000	六角法兰螺栓M8×20	BOLT M8*20	2					

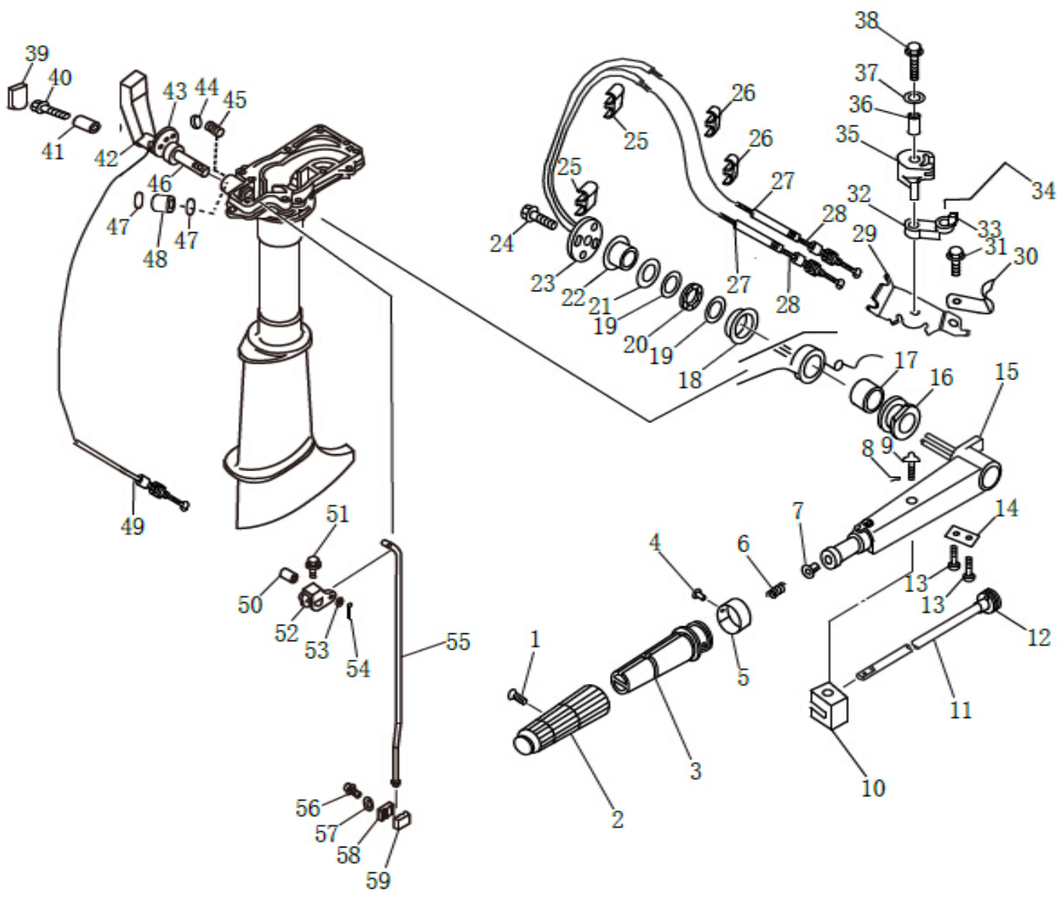

REF. NO. 编号	PART NO. 零件号码	DESCRIPTION 零件名称	DESCRIPTION 零件名称	NEEDED PCS 数量					REMARKS 备注
1	GB/T818-2000	十字半沉头螺钉M5×25	SCREW M5×25	1					
2	T15-02010203	手柄橡胶套	RUBBER SLEEVE	1					
3	T15-02010201	操舵手柄塑料套	PLASTIC SLEEVE	1					
4	GB/T827-86	铆钉	RIVET	1					
5	F15-05020403	油门标牌	SIGN,ACCELERATOR	1					
6	F15-05020007	压簧3.2×14.5×20-5	PRESSING SPRING	1					
7	F15-05020006	衬套	BUSH	1					
8	GB91-2000	开口销1.6×12	COTTER	1					
9	F4-04010300	摩擦调节螺栓	ADJUST BOLT	1					
10	F4-04000012	油门杆摩擦块	FRICTION BLOCK	1					
11	F6-03020101	油门杆嵌件	INSERT,ACCELERATOR ROD	1					
12	F6-03020100	油门杆	DROD ACCELERATOR	1					
13	GB/T818-85	十字盘头螺栓M5×12	BOLT M5*12	2					
14	F4-04010002	节气门杆固定板	PLATE	1					
15	F6-03020001	操舵手柄	STEERING HANDLE	1					

REF. NO. 编号	PART NO. 零件号码	DESCRIPTION 零件名称	DESCRIPTION 零件名称	NEEDED PCS 数量					REMARKS 备注
16	F6-03020200	操舵减震圈	DAMPER	1					
17	F6-03020201	减震圈嵌件	INSERT DAMPER	1					
18	F6-03020202	后衬套	REAR BUSHING	1					
19	F6-03020204	平垫片43×37×1	WASHER	2					
20	F6-03020206	波形垫圈48×37×1.5	WAVE WASHER	1					
21	F6-03020205	平垫片43×36×1.5	WASHER	1					
22	F6-03020203	前衬套	FRONT BUSHING	1					
23	F6-03020207	操舵手柄盖板	COVER,HANDLE	1					
24	GB/T5789-2000	六角法兰螺栓M8×15	BOLT M8*15	1					
25	F6-03000006	双槽线夹（小）	CLIP (SMALL)	2					
26	F6-03000007	双槽线夹（大）	CLIP (BIG)	2					
27	F6-03000202	油门钢索护管	TUBE,WIRE ROPE	2					组件
28	F6-03000202	油门钢索L=510	THROTTLE CABLE	2					组件
29	F6-02000028	钢索支架	HOLDER,WIRE ROPE	1					
30	F15-11010017	挂线卡	CLIP	1					
31	GB/T5789-2000	六角法兰螺栓M6×10	BOLT M6×10	1					
32	F6-02000029	主动滑轮	DRIVING PULLEY	1					
33	F15-11000016	油门连杆接头	JOINT,THROTTLE ROD	1					
34	F6-02000032	油门连杆	THROTTLE ROD	1					
35	F6-02000030	从动滑轮	FOLLOW-UP PULLEY	1					
36	F6-02000031	滑轮衬套10×6.8×20.2	BUSH PULLEY	1					
37	GB/T96-85	平垫6	WASHER	1					
38	GB/T5789-2000	六角法兰螺栓M6×35	BOLT M6×35	1					
39	F6-06000202	变档手柄盖	COVER,GEAR HANDLE	1					
40	GB/T5789-2000	六角法兰螺栓M8×40	BOLT M8×40	1					
41	F6-06000201	变档手柄嵌件15×10×40	INSERT,GEAR HANDLE	1					
42	F6-06000200	变档手柄	GEAR HANDLE	1					
43	F6-06010101	变档定位板	ORIENTATTON PLAT,GEAR	1					
44	GB/T17445-98	钢球8	STEEL BALL	1					
45	F4-04000014	弹簧1×8×18	SPRING	1					
46	F6-06010102	变档手柄轴	SHAFT,GEAR HANDLE	1					
47	GB/T3452.1-92	O形圈9×2	O-RING	2					
48	F6-06000002	轴铜衬16×12×37.5	BUSH	1					
49	F4-05000800	制动钢索L=434	STOPPER CABLE	1					
50	F6-06000004	连接件垫管10×6.5×12	BUSH	1					
51	GB/T5789-2000	六角法兰螺栓M5×25	BOLT,PLANGE	1					
52	F6-06000003	变档连接件	CONNECTING,GEAR	1					
53	GB/T96-85	平垫6	WASHER 6	1					
54	GB91-2000	开口销12	COTTER	1					
55	F4-02000004	变档连杆	ROD,SHIFT	1					
56	GB/T5789-2000	六角法兰螺栓M6×25	BOLT M6*25	1					
57	GB/T96-85	平垫6	WASHER	1					
58	F4-04000004	变档连接块垫片A	CONNECTOR A,SHIFT ROD	1					
59	F4-04000005	变档连接块垫片B	CONNECTOR B,SHIFT ROD	1					

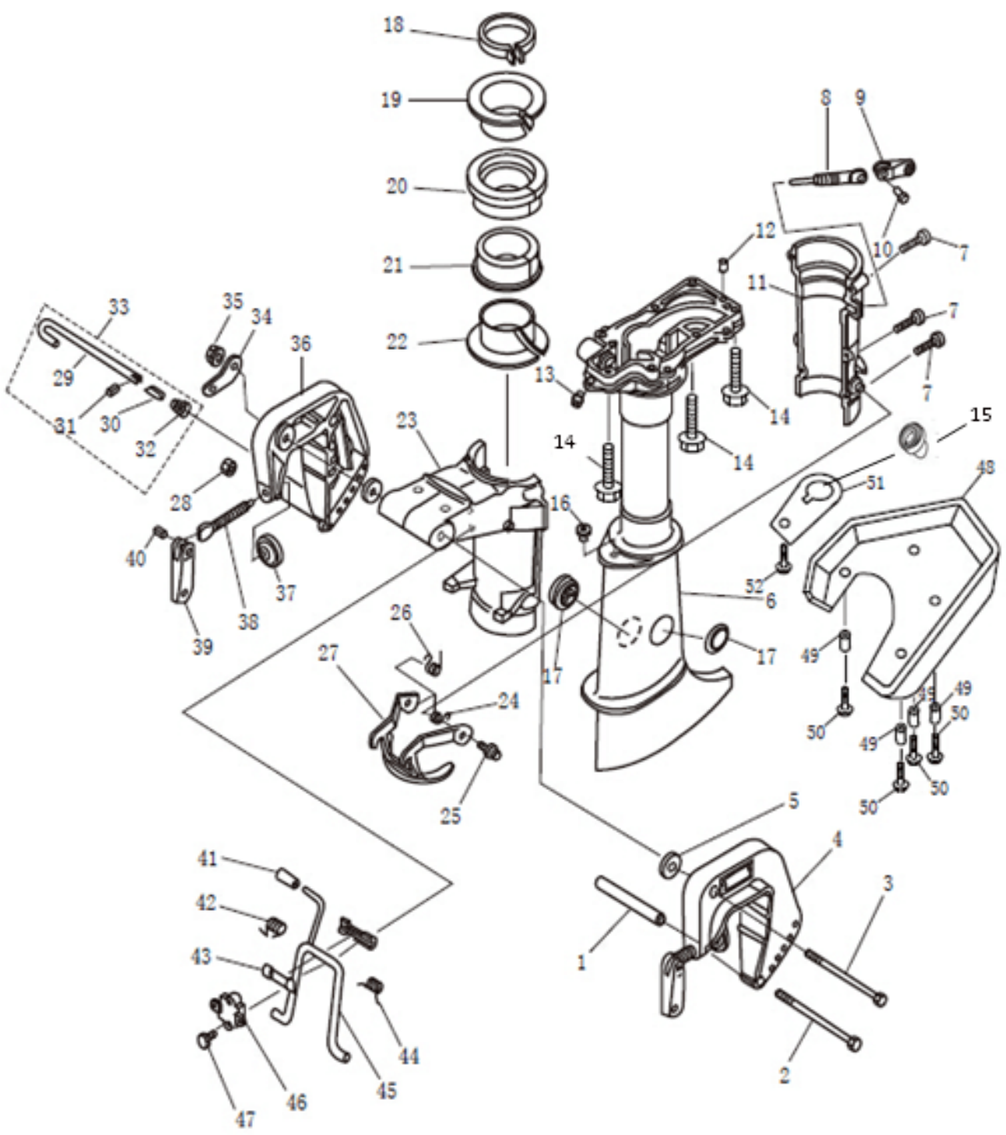

REF. NO. 编号	PART NO. 零件号码	DESCRIPTION 零件名称	DESCRIPTION 零件名称	NEEDED PCS 数量					REMARKS 备注
1	F4-00000003	螺栓垫管	NUT,WASHER	1					
2	GB/T5789-2000	六角法兰螺栓M6×120	BOLT M6*120	1					
3	GB/T5789-2000	六角法兰螺栓M8×135	BOLT M8*135	1					
4	F4-00000101	右夹紧支架	BRACKET,CLAMP1	1					
5	F4-00000002	尼龙垫片30×8.5×2	NYLON WASHER	2					
6	F6-05000001	水上装置壳体	CASING,UPPER	1					
7	GB/T5789-2000	六角法兰螺栓M6×35	BOLT M6*35	6					

REF. NO. 编号	PART NO. 零件号码	DESCRIPTION 零件名称	DESCRIPTION 零件名称	NEEDED PCS 数量					REMARKS 备注
8	F4-04000101	锁紧螺栓	LOCKING BOLT	1					
9	F4-04000102	锁紧螺栓手柄	LOCK HANDLE,BRACKET	1					
10	GB/T875-86	铆钉销5×8	PIN 5*8	1					
11	F4-04000001	旋转支架盖	BRACKET,PIVOT SHAFT	1					
12	F4-00000008	空心定位销9×6.5×10	PIN	2					
13	JB/T7940.1-95	直通式压注油杯M6	OILER	1					
14	GB/T5789-2000	六角法兰螺栓M6×32	BOLT M6*32	7					
15	F6-03000004	导油橡胶套	DAMPING RUBBER BOOT	1					
16	T2.5-02000020	护线套	BUSHING,WIRE	1					
17	F4-02000010	水上装置堵头	STOPPER,CASING LOWER	2					
18	F4-02000200	水上装置锁紧组件	LOCKING ASSY,CASING LOWER	1					
19	F4-02000007	上减震圈衬套	SHEAVE,BUSH UPPER	1					
20	F4-02000006	上减震圈	BUSH,UPPER	1					
21	F4-02000008	下减震圈	BUSH,LOWER	1					
22	F4-02000009	下减震圈衬套	SHEAVE,BUSH LOWER	1					
23	F4-01000001	旋转支架座	CAP,BRACKET SWIVEL	1					
24	F4-04000003	锁紧勾钮簧(右)	SPRING B,LOCKING	1					
25	GB/T5789-2000	六角法兰螺栓M6×10	BOLT M6*10	2					
26	F4-04000002	锁紧勾钮簧(左)	SPRING A,LOCKING	1					
27	F4-04000200	锁紧勾	LOCKING	1					
28	GB/T6170-86	六角螺母M6	HEX NUT	1					
29	F4-00000201	角度调节杆	ANGLE KNOB	1					
30	F4-00000203	防脱落支架	PIVOT SHAFT	1					
31	GB879-86	弹性圆柱销	PIN,SPRING	1					
32	F4-00000202	塔型弹簧	SPRING	1					
33	F4-00000200	角度调节杆组件	ANGLE KNOB ASSY	1					
34	F4-00000001	双孔固定板	PLATE,DOUBLE HOLE	1					
35	GB/T6170-86	六角锁紧螺母M8	BOLT,FLANGE	1					
36	F4-00000201	夹紧托架（左）	BRACKET,CLAMP2	1					
37	F15-01000003	艉板圆盘	PAD,TRANSOM CLAMP	2					
38	F4-00000102	艉板夹紧螺钉	SCREW,TRANSOM CLAMP	2					
39	F15-01000004	艉板夹紧手柄	HANDLE,TRANSOM CLAMP	2					
40	F15-01000005	铆钉4×22	PIN 4*22	2					
41	F4-02000103	支撑架手柄套	GRIP,BRACKET HANDLE	1					
42	F4-01000003	支撑架钮簧(左)	SPRING A,BRACKET	1					
43	F4-01000002	支撑架尼龙衬套	NYLON BUSH,BRACKET	1					
44	F4-04000200	起翘锁紧钩组件	BRACKET	1					
45	F4-01000004	支撑架钮簧(右)	SPRING B,BRACKET	1					
46	F4-01000005	支撑架固定盖	CAP,BRACKET	1					
47	GB/T6170-86	六角法兰螺栓M6×20	BOLT M6*20	2					
48	F6-01000001	装饰罩	DECORATIVE COVER	1					
49	F4-01000002	装饰罩衬套	BUSH DECORATIVE COVER	4					
50	F4-04000200	六角法兰螺栓M6×12	BOLT M6*12	4					
51	F6-03000005	导油套压板	PLATE	1					
52	GB/T6170-86	六角法兰螺栓M6×12	BOLT M6*12	1					

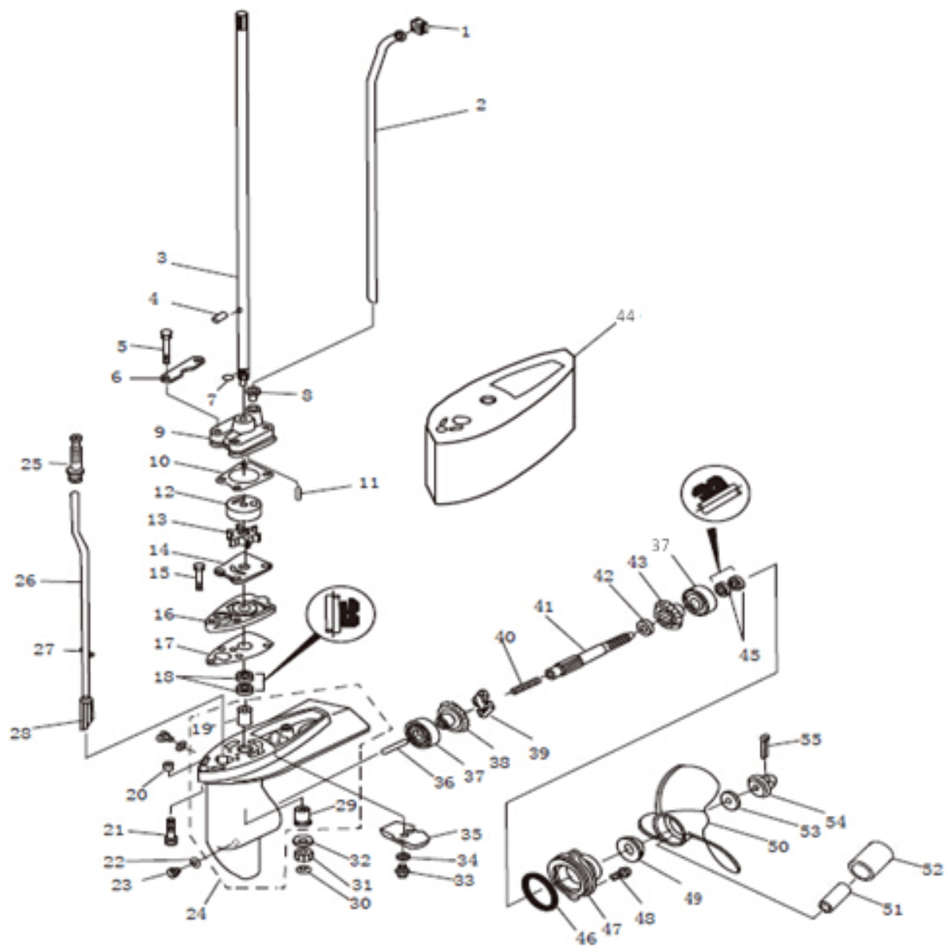

REF. NO. 编号	PART NO. 零件号码	DESCRIPTION 零件名称	DESCRIPTION 零件名称	NEEDED PCS 数量					REMARKS 备注
1	T2.5-07000021	工型橡胶圈	RING, RUBBER	1					
2	F4-03000028S	进水管(短)	PIPE S	1					
	F4-03000028L	进水管（长）	PIPE L	2					
3	F4-03000004S	传动轴(短)	DRIVE SHAFT S	1					
	F4-03000005L	传动轴(长)	DRIVE SHAFT L	1					
4	GB/T119.1-2000	定位销3.5×9	PIN,COTTER	1					
5	GB/T5789-2000	六角法兰螺栓M6×45	BOLT,FLANGE	4					
6	F4-03000020	水泵壳固定板	LOCKING PLATE,PUMP BODY	2					
7	F4-03000005	轴用开口挡圈	PIN COPPER,SHAFT 8	1					
8	T2.5-07000022	泵壳橡胶管套	BUSH,PUMP PIPE	1					
9	F4-03000019	水泵壳	WATER PUMP BODY	1					
10	F4-03000018	水泵壳密封垫	GASKET,WATER PUMP BODY	1					

REF. NO. 编号	PART NO. 零件号码	DESCRIPTION 零件名称	DESCRIPTION 零件名称	NEEDED PCS 数量					REMARKS 备注
11	GB/T119.1-2000	定位销4×18	PIN	2					
12	F4-03000017	水泵内胆	INNER HOUSE,WATER PUMP	1					
13	F4-03000600	水泵叶轮	IMPELLER	1					
14	F4-03000015	外挡板	OUTER DAMPER	1					
15	GB/T5789-2000	六角法兰螺栓M6×25	BOLT,FLANGE	1					
16	F4-03000022	水泵座	HOUSING, BEARING	1					
17	F4-03000021	水泵座垫	GASKET,HOUSING BEARING	1					
18	F4-05000403	油封 10.8x21x7	OIL SEAL 10.8x21x7	2					
19	F4-03000003	不带档边铜套	COPPER BUSH A	1					
20	F4-00000008	空心定位销9×6.5×10	PIN	2					长轴为4个
21	GB/T5789-2000	六角法兰螺栓M6×40	BOLT,FLANGE	1					长轴为165mm长
22	T8-07000001	注油孔密封垫	GASKET,GEAR OIL DRAIN	1					
23	GB/T5789-2000	注油螺丝	BOLT,GEAR OIL DRAIN	1					
24	F4-03000001	水下壳体	CASING,LOWER	1					
25	F4-03000014	变档橡胶护套	RUBBER SLEEVE,SHIFT CAM	1					
26	F4-03000201S	变档凸轮轴(短)	CAM SHIFT,SHORT SHAFT	1					
	F4-03000201L	变档凸轮轴(长)	CAM SHIFT,LONG SHAFT	1					
27	GB879-86	弹性圆柱销	PIN,SPRING	1					
28	F4-03000202	变档凸轮	GEAR,SHIFT	1					
29	T2.5-07000026	带档边铜套	COPPER BUSH B	1					
30	GB/T861.1-87	开口档圈6	CIRCLIP	1					
31	F4-03000007	主动齿轮	PINION	1					
32	F4-03000006	主动齿轮垫圈	WASHER,PINION	1					
33	GB/T5789-2000	六角法兰螺栓M6×16	BOLT M6*16	1					
34	GB/T861.1-87	内齿垫圈6	WASHER	1					
35	T2.5-07000024	阳极	ANODE	1					
36	F4-03000009	变档柱塞	PLUNGER,SHIFT	1					
37	GB/T276-96	轴承6004C2	BEARING	2					
38	F4-03000100	正档齿轮	FORWARD GEAR	1					
39	F4-03000302	离合器块	CLUTCH BLOCK	1					
40	F4-02000003	变档弹簧8×1×46	SPRING,COMPRESSION	1					
41	F4-03000301	螺旋桨轴	PROPELLER SHAFT	1					
42	F4-03000010	倒档齿轮垫圈	WASHER,REVERSE GEAR	1					
43	F4-03000400	倒档齿轮	REVERSE GEAR	1					
44	F4-05000003	接长体	LONG SHAFT EXTRA HOUSE	1					
45	F4-03000502	油封 13x22x7	OIL SEAL 13x22x7	2					
46	GB/T3452.1-92	O型圈 47.1x3.5	O-RING 47.1x3.5	1					
47	F4-03000501	水下壳体盖	CAP,CASING LOWER	1					
48	GB/T5789-2000	六角法兰螺栓M6×16	BOLT M6*16	2					
49	F4-03000025	螺旋桨垫块	BLOCK,PROPELLER	1					
50	F4-03000700	螺旋桨	PROPELLER	1					
51	F4-03000702	花键内齿芯轴	CORE SHAFT	1					
52	F4-03000703	内花键橡胶	SPLINE RUBBER	1					
53	F4-03000026	螺旋桨垫片	WASHER,PROPELLER	1					
54	F4-03000800	螺母组件	NUT,ASSY	1					
55	GB/T91-2000	开口销2.5x30	PIN,COTTER	1					

PARTS MANUAL F4B/F5B/F6	页码 PAGE NO.:	PAGE 22 OF 23
	零件名称:	油箱1
	PARTS NAME:	FUEL TANK ASSY

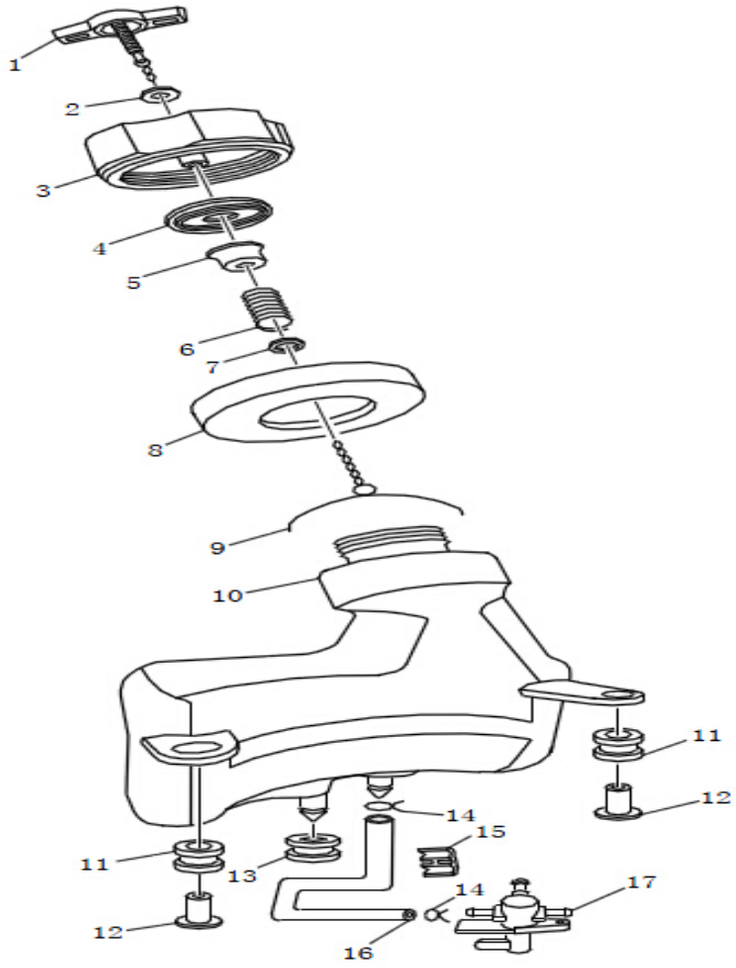

REF. NO. 编号	PART NO. 零件号码	DESCRIPTION 零件名称	DESCRIPTION 零件名称	NEEDED PCS 数量					REMARKS 备注
1	F4-05060102	油箱盖旋钮组件	ROTARY KNOB	1					
2	F4-05060109	油箱盖放气密封圈	GASKET	1					
3	F4-05060101	油箱盖组件	COVER,FUEL TANK	1					
4	F4-05060110	油箱盖橡胶密封垫	RUBBER GASKET	1					
5	F4-05060107	碗型托圈	BACKING RING	1					
6	F6-02010201	弹簧0.8×8×15-7	SPRING	1					
7	F4-05060105	锁圈	RETAINER	1					
8	F4-05060004	发泡垫	GASKET,FUEL CAP	1					
9	F4-05060103	油箱盖防脱链组件	OVERHAND,FUEL TANK	1					
10	F6-02010006	内油箱	INNER FUEL TANK	1					
11	F4-05060002	油箱减震圈	DAMPER	2					
12	F4-05060003	油箱减震衬管	BUSH,DAMPER	2					
13	F6-02010008	油箱下减震圈	DAMPER	1					
14	F15-01000018	管卡9.5	CLAMP	2					
15		油管夹	CLIP,HOSE	1					
16	F6-02010001	开关进油定形管5×10	HOSE	1					
17	F6-03000100	油开关	FUEL COCK	1					

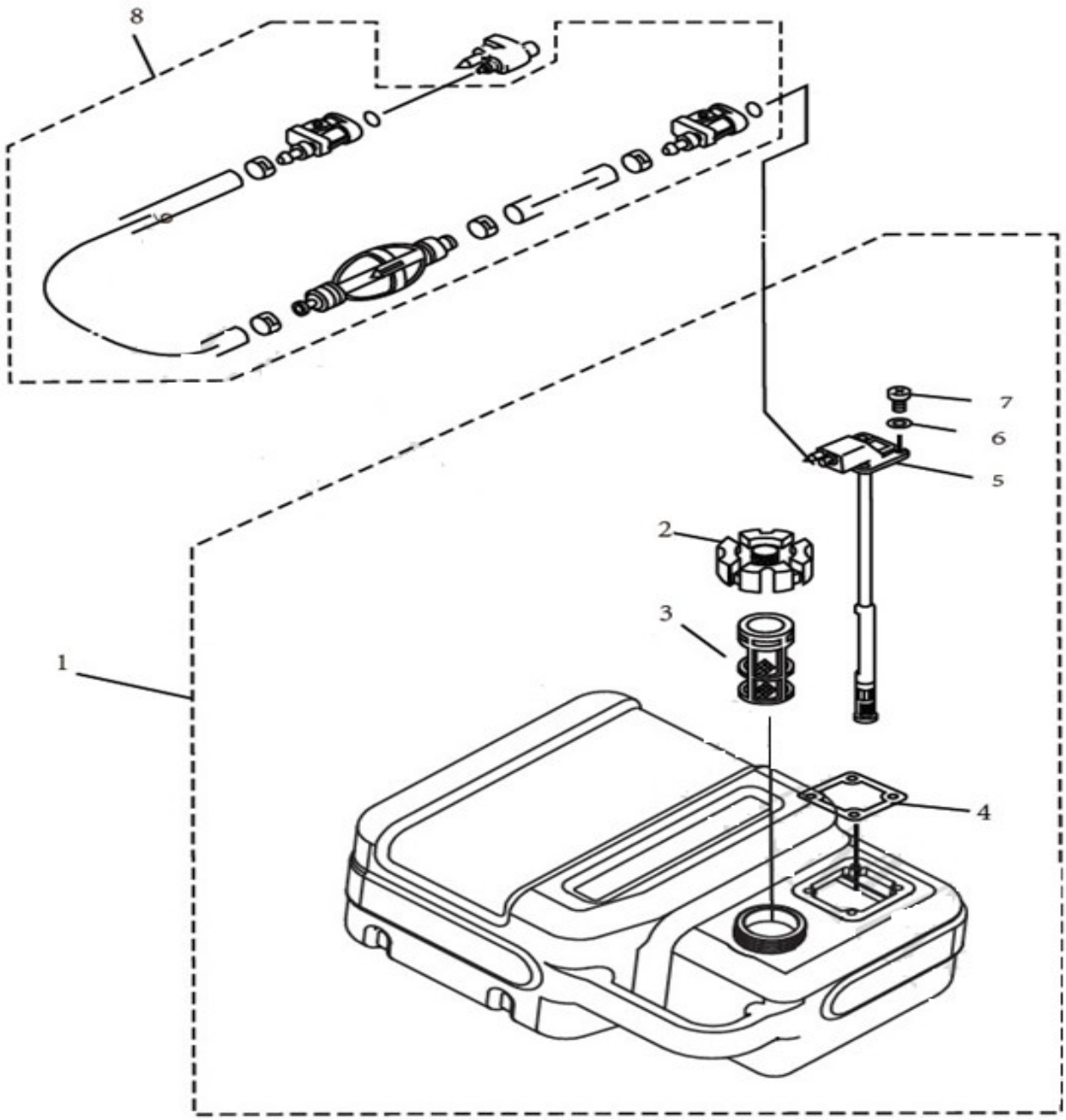

REF. NO. 编号	PART NO. 零件号码	DESCRIPTION 零件名称	DESCRIPTION 零件名称	NEEDED PCS 数量					REMARKS 备注
1	T4-09000100	燃油箱组合	FUEL TANK ASSY(12L)	1					
2	F15-14000100	油箱盖总成	CAP ASSY	1					
3	F15-14000002	油箱滤网	FUEL METER ASSY	1					
4	F15-14010012	密封衬垫	SEAL	1					COMPLETELY
5	T4-09000300	油量计组合	FUEL METER ASSY	1					
6	GB/T97.1-85	平垫片5	WASHER	4					
7	GB/T818-94	十字盘头螺钉M5×20	SCREW M5*20	4					
8	F15-13000000	燃油管组件	FUEL PIPE COMP.1	1					